hammond
POWER SOLUTIONS

HPS FORTRESS™

Encapsulated Transformers for Commercial Applications

HPS Fortress™ Encapsulated Transformer for Commercial Applications

For commercial applications where airborne contaminants are present, HPS general-purpose encapsulated transformers offer a cost-effective solution that prioritizes safety, quality and ease of installation and maintenance.

The core and coil are completely encapsulated in epoxy and silica. This provides excellent protection against airborne particles and moisture build-up inside the transformer enclosure, significantly reducing the risk of operational interruptions.

Applications

Shopping Centers | Schools | Sports Complexes

Office Buildings | Lighting | Wastewater

For industrial applications requiring “Class 1, Division 2, Groups A, B, C and D Hazardous Locations” please refer to the HPS Titan N Series.

Standard Design

- **Aluminum windings** (on units above 3kVA) - Provide a cost effective solution without compromising on quality and performance.
- **Standard electrostatic shield** (units 750VA and above) - Provides an additional layer of protection against electromagnetic interference, ensuring stable performance.
- **Higher impedance designs** (3 Phase) - Minimizes short circuit currents allowing for the use of more cost-effective protective devices, reducing your overall project expenses.
- **Standard 10kV BIL** (3 Phase) - Provides increased reliability and protection against critical equipment failure (including voltage spikes and other line transients).
- **Improved efficiency level** - Reduces energy costs.

Approvals

- UL Listed, file No. E50394
- CSA Certified file No. LR3902

Features & Benefits

Single Phase

Wall Mounting - Installation made quick and easy with keyhole mounting slots and supplied wall mounting template.

Type 3R Enclosure - Suitable for indoor and outdoor applications.

Rear and Side Entry Conduit Knockouts - Provide easy access into a roomy wiring compartment.

Easily Accessible Nameplate - Provides wiring diagram for ease of installation.

Encapsulated in Epoxy & Silica - Protects transformer components from moisture and airborne contaminants, for prolonged operational life.

*Picture displayed above is of a standard single phase unit.

Three Phase

Removable Hinged Door - Allows for convenient access to terminations for easier installation and maintenance.

Textured Paint - Provides excellent durability.

Adjustable Screw Clips With Gasket Stop.

Standard Type 4 Enclosure - Highly suitable for indoor and outdoor applications (optional 4X available).

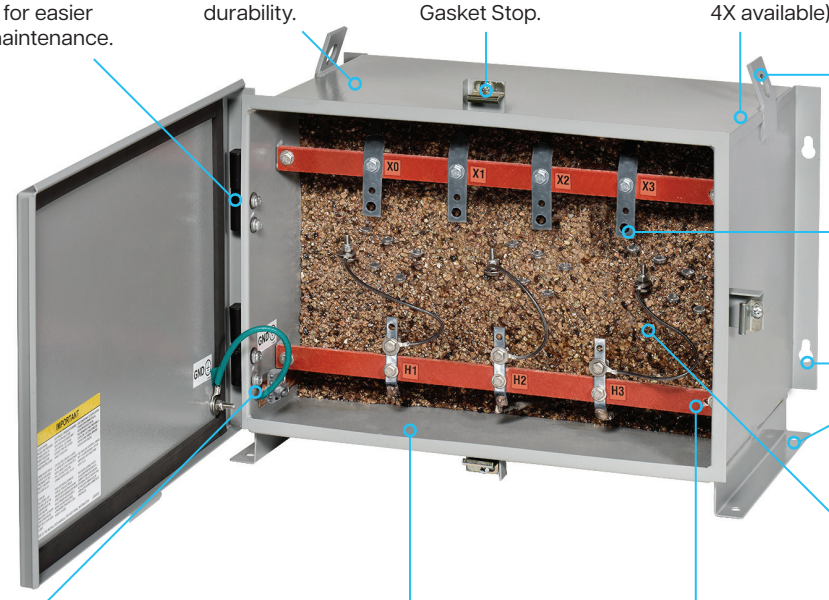

Lifting Hooks - Pre-installed for improved handling and transportation.

Voltage Taps - Easily accessible for installation via hinged door.

Wall & Floor Mounting (on select kVA's) - Pre-installed reducing the time and effort required for installation, contributing to overall cost savings.

Factory Installed Grounding Lugs - Installed to save you time and money with easy access to the ground.

Optional Breather Drains - Ensures any moisture build-up due to condensation is easily eliminated without compromising the integrity of the Type 4 enclosure.

Separate High & Low Voltage Terminal Boards (15 kVA and up only) - Allowing for safe and easy connections.

Encapsulated in Epoxy & Silica - Protects transformer components from moisture and airborne contaminants, for prolonged operational life.

*Picture displayed above is of a standard three phase unit.

Specifications & Accessories

Standard Specifications

Features	Single Phase	Three Phase
kVA:	50VA to 37.5kVA	6kVA to 75kVA
UL Listed:	E50394	
Frequency:	60Hz (50/60Hz options available for specific voltages groups)	60Hz or 50/60Hz
Shield:	Standard on 750VA and up	Standard on all units
Insulation System:	130°C (95°C rise) up to 1 kVA 180°C (135°C rise) 1.5 to 37.5kVA Optional 180°C (95°C rise) 1.5 to 37.5kVA	135°C rise (220°C class)
Enclosure Type:	Heavy duty enclosed Type 3R standard (Optional Type 4, 12)	Heavy duty enclosed Type 4 standard (Optional Type 4X)
Enclosure Finish:	ANSI 61 Grey	ANSI 61 Grey, UL50E textured powered coating or stainless steels.
Optional Accessories:	N/A	Glass filled Nylon condensate valve Part number: PLG19000 (Optional SS available)
Standard Primary Taps:	Refer to wiring diagrams for details.	
Termination:	Front accessible separated high and low voltage lead wires or mounting pads.	
Conduit Entry:	Rear and side entry.	Side or bottom enclosure entry (exceptions apply on bottom entry).
Impedance:	Typically 1% to 7%	Typically 2% to 5%
Sound Level:	Meets NEMA ST-20 standards	
Warranty:	10 year limited*	

**Please refer to the HPS website for full details.*

Single Phase Part Number Guide

Example

Family			kVA			Pri. Volt.	Sec. Volt.	Electrostatic Shield
C	1	F	0	0	5	L	E	S

Family

C1F - HPS Fortress 1PH

kVA Rating

0.05kVA	- C05
0.10kVA	- C10
0.15kVA	- C15
0.25kVA	- C25
0.35kVA	- C35
0.50kVA	- C50
0.75kVA	- C75
1.0kVA	- 1C0
1.5kVA	- 1C5
2kVA	- 002
3kVA	- 003
5kVA	- 005
7.5kVA	- 007
10kVA	- 010
15kVA	- 015
25kVA	- 025
37.5kVA	- 037

Primary Voltage

1PH:
E - 120 x 240
W - 120/208/240/277
G - 208 x 416
L - 240 x 480
C - 277[1]
H - 277/480[1]
J - 347/380[1]
P - 600

Secondary Voltage

1PH:
E - 120/240
R - 208/277

Shield:

S - Shielded

Note: Shielded windings are only available and are standard on single phase units over 750VA and must have the letter "S" in the part number.

**Default options - ignore if all following characters are default values*
- *95°C rise is standard on units up to and including 1kVA.*
- *135°C rise is standard on units 1.5kVA and above.*
- *95°C rise is optional on units 1.5kVA and above.*

Three Phase Part Number Guide

Example

Family	Appl. Type	Generation	Phase	kVA				Pri. Volt.	Sec. Volt.	Winding Material/ Electrostatic Shield	Temp. Rise & Insul. Class	Frequency	Enclosure
F	C	2	A	0	0	4	5	K	B	S	P	6	F

Family

F - Fortress

Type

C - Commercial

Generation

2 - Current designs

Phase (Pri-Sec)

A - 3PH Delta-Wye-N*
C - 3PH Delta-Delta/CT[1]
D - 3PH Delta-Delta

kVA Ratings

6kVA	- 0006
9kVA	- 0009
15kVA	- 0015
30kVA	- 0030
45kVA	- 0045
75kVA	- 0075

Primary Voltage

3PH
B - 208
D - 240
G - 380[3]
M - 440
K - 480
P - 600

Secondary Voltage

3PH
B - 208Y/120
C - 230Y/133
D - 240D/120CT
G - 380Y/220
K - 480Y/277
V - 220Y/127

Winding Material

S - AL + Shield

Temperature Rise

P - 135°C Rise (220°C Class)

Frequency

5 - 50/60Hz
6 - 60Hz*

Enclosure

F - Type 4*[2]
G - Type 4X (304SS)
H - Type 4X (316SS)

**Default Options*
[1]Available standard only with 240D/120CT secondaries.
[2]Type 4 enclosure is also Type 12.
[3]Units with primary voltage code "G" come standard as 50/60Hz.

SELECTION TABLES

Aluminum Single Phase, Type 3R Enclosure

120X240 PRIMARY VOLTAGE 120/240 SECONDARY VOLTAGE 60 HZ

kVA	Catalog Number	Case Style	Overall Dimensions* - Inches [mm]			Approx. Weight Lbs [kg]	Mtg Type W -Wall F -Floor	Wiring Diagram
			A	B	C			
0.05	C1FC05EE*	NQ0	3.69 [93.73]	5.06 [128.53]	7.19 [182.63]	7.0 [3.2]	W	SCD 1F
0.10	C1FC10EE*	NQ0	3.69 [93.73]	5.06 [128.53]	7.19 [182.63]	7.0 [3.2]	W	SCD 1F
0.15	C1FC15EE*	NQ0	3.69 [93.73]	5.06 [128.53]	7.19 [182.63]	8.0 [3.6]	W	SCD 1F
0.25	C1FC25EE*	NQ0	3.69 [93.73]	5.06 [128.53]	7.19 [182.63]	9.0 [4.1]	W	SCD 1F
0.35	C1FC35EE*	NQ1	4.31 [109.48]	5.56 [141.23]	7.19 [182.63]	15.0 [6.8]	W	SCD 1F
0.50	C1FC50EE*	NQ1	4.31 [109.48]	5.56 [141.23]	7.19 [182.63]	16.0 [7.2]	W	SCD 1F
0.75	C1FC75EES*	NQ2	5.06 [128.53]	4.56 [115.83]	9.30 [236.22]	23.0 [10.4]	W	SCD 1F
1	C1F1C0EES*	NQ3	5.88 [149.36]	5.19 [131.83]	10.56 [268.23]	24.0 [10.8]	W	SCD 1F
1.5	C1F1C5EES*	NQ3	5.88 [149.36]	5.19 [131.83]	10.56 [268.23]	33.0 [14.9]	W	SCD 1F
2	C1F002EES*	NQ4	7.06 [179.33]	6.25 [158.75]	11.75 [298.45]	42.0 [18.9]	W	SCD 1F
3	C1F003EES*	NQ4	7.06 [179.33]	6.25 [158.75]	11.75 [298.45]	55.0 [24.8]	W	SCD 1F
5	C1F005EES	NQ5	10.00 [254.00]	7.75 [196.85]	17.25 [438.15]	96.0 [43.2]	W	SCD 1F
7.5	C1F007EES	NQ6A	12.25 [311.15]	9.25 [234.95]	17.63 [447.81]	148 [67]	W	SCD 2F
10	C1F010EES	NQ6	12.25 [311.15]	9.25 [234.95]	20.88 [530.36]	178 [80]	W	SCD 2F

** Copper wound unit*

208X416 PRIMARY VOLTAGE 120/240 SECONDARY VOLTAGE 60 HZ

kVA	Catalog Number	Case Style	Overall Dimensions* - Inches [mm]			Approx. Weight Lbs [kg]	Mtg Type W -Wall F -Floor	Wiring Diagram
			A	B	C			
0.05	C1FC05GE*	NQ0	3.69 [93.73]	5.06 [128.53]	7.19 [182.63]	7.0 [3.2]	W	SCD 1F
0.10	C1FC10GE*	NQ0	3.69 [93.73]	5.06 [128.53]	7.19 [182.63]	7.0 [3.2]	W	SCD 1F
0.15	C1FC15GE*	NQ0	3.69 [93.73]	5.06 [128.53]	7.19 [182.63]	8.0 [3.6]	W	SCD 1F
0.25	C1FC25GE*	NQ0	3.69 [93.73]	5.06 [128.53]	7.19 [182.63]	9.0 [4.1]	W	SCD 1F
0.35	C1FC35GE*	NQ1	4.31 [109.48]	5.56 [141.23]	7.19 [182.63]	15.0 [6.8]	W	SCD 1F
0.50	C1FC50GE*	NQ1	4.31 [109.48]	5.56 [141.23]	7.19 [182.63]	16.0 [7.2]	W	SCD 1F
0.75	C1FC75GES*	NQ2	5.06 [128.53]	4.56 [115.83]	9.30 [236.22]	23.0 [10.4]	W	SCD 1F
1	C1F1C0GES*	NQ3	5.88 [149.36]	5.19 [131.83]	10.56 [268.23]	24.0 [10.8]	W	SCD 1F
1.5	C1F1C5GES*	NQ3	5.88 [149.36]	5.19 [131.83]	10.56 [268.23]	33.0 [14.9]	W	SCD 1F
2	C1F002GES*	NQ4	7.06 [179.33]	6.25 [158.75]	11.75 [298.45]	42.0 [18.9]	W	SCD 1F
3	C1F003GES*	NQ4	7.06 [179.33]	6.25 [158.75]	11.75 [298.45]	55.0 [24.8]	W	SCD 1F
5	C1F005GES	NQ5	10.00 [254.00]	7.75 [196.85]	17.25 [438.15]	96.0 [43.2]	W	SCD 1F
7.5	C1F007GES	NQ6A	12.25 [311.15]	9.25 [234.95]	17.63 [447.81]	148 [67]	W	SCD 2F
10	C1F010GES	NQ6	12.25 [311.15]	9.25 [234.95]	20.88 [530.36]	178 [80]	W	SCD 2F

** Copper wound unit*

120/208/240/277 PRIMARY VOLTAGE 120/240 SECONDARY VOLTAGE 60 HZ

kVA	Catalog Number	Case Style	Overall Dimensions* - Inches [mm]			Approx. Weight Lbs [kg]	Mtg Type W -Wall F -Floor	Wiring Diagram
			A	B	C			
0.05	C1FC05WE*	NQ0	3.69 [93.73]	5.06 [128.53]	7.19 [182.63]	7.0 [3.2]	W	SCD 41F
0.10	C1FC10WE*	NQ0	3.69 [93.73]	5.06 [128.53]	7.19 [182.63]	7.0 [3.2]	W	SCD 41F
0.15	C1FC15WE*	NQ0	3.69 [93.73]	5.06 [128.53]	7.19 [182.63]	8.0 [3.6]	W	SCD 41F
0.25	C1FC25WE*	NQ1	4.31 [109.48]	5.56 [141.23]	7.19 [182.63]	10.0 [4.5]	W	SCD 41F
0.35	C1FC35WE*	NQ2	5.06 [128.53]	4.56 [115.83]	9.30 [236.22]	17.0 [7.7]	W	SCD 41F
0.50	C1FC50WE*	NQ2	5.06 [128.53]	4.56 [115.83]	9.30 [236.22]	25.0 [11.3]	W	SCD 41F
0.75	C1FC75WES*	NQ2	5.06 [128.53]	4.56 [115.83]	9.30 [236.22]	23.0 [10.4]	W	SCD 41F
1	C1F1C0WES*	NQ3	5.88 [149.36]	5.19 [131.83]	10.56 [268.23]	24.0 [10.8]	W	SCD 41F
1.5	C1F1C5WES*	NQ3	5.88 [149.36]	5.19 [131.83]	10.56 [268.23]	37.0 [16.7]	W	SCD 41F
2	C1F002WES*	NQ4	7.06 [179.33]	6.25 [158.75]	11.75 [298.45]	52.0 [23.4]	W	SCD 41F
3	C1F003WES*	NQ5	10.00 [254.00]	7.75 [196.85]	17.25 [438.15]	65.0 [29.3]	W	SCD 2F
5	C1F005WES	NQ5	10.00 [254.00]	7.75 [196.85]	17.25 [438.15]	108 [49]	W	SCD 2F
7.5	C1F007WES	NQ6	12.25 [311.15]	9.25 [234.95]	20.88 [530.36]	171 [77]	W	SCD 2F
10	C1F010WES	NQ6	12.25 [311.15]	9.25 [234.95]	20.88 [530.36]	183 [82]	W	SCD 2F

** Copper wound unit*

SELECTION TABLES

Aluminum Wound Single Phase, Type 3R Enclosure

240X480 PRIMARY VOLTAGE 120/240 SECONDARY VOLTAGE 60 HZ

kVA	Catalog Number	Case Style	Overall Dimensions* - Inches [mm]			Approx. Weight Lbs [kg]	Mtg Type W -Wall F -Floor	Wiring Diagram
			A	B	C			
0.05	C1FC05LE*	NQ0	3.69 [93.73]	5.06 [128.53]	7.19 [182.63]	7.0 [3.2]	W	SCD 1F
0.10	C1FC10LE*	NQ0	3.69 [93.73]	5.06 [128.53]	7.19 [182.63]	7.0 [3.2]	W	SCD 1F
0.15	C1FC15LE*	NQ0	3.69 [93.73]	5.06 [128.53]	7.19 [182.63]	8.0 [3.6]	W	SCD 1F
0.25	C1FC25LE*	NQ1	4.31 [109.48]	5.56 [141.23]	7.19 [182.63]	9.0 [4.1]	W	SCD 1F
0.35	C1FC35LE*	NQ1	4.31 [109.48]	5.56 [141.23]	7.19 [182.63]	15.0 [6.8]	W	SCD 1F
0.50	C1FC50LE*	NQ1	4.31 [109.48]	5.56 [141.23]	7.19 [182.63]	16.0 [7.2]	W	SCD 1F
0.75	C1FC75LES*	NQ2	5.06 [128.53]	4.56 [115.83]	9.30 [236.22]	23.0 [10.4]	W	SCD 1F
1	C1F1C0LES*	NQ3	5.88 [149.36]	5.19 [131.83]	10.56 [268.23]	24.0 [10.8]	W	SCD 1F
1.5	C1F1C5LES*	NQ3	5.88 [149.36]	5.19 [131.83]	10.56 [268.23]	33.0 [14.9]	W	SCD 1F
2	C1F002LES*	NQ4	7.06 [179.33]	6.25 [158.75]	11.75 [298.45]	42.0 [18.9]	W	SCD 1F
3	C1F003LES*	NQ4	7.06 [179.33]	6.25 [158.75]	11.75 [298.45]	55.0 [24.8]	W	SCD 1F
5	C1F005LES	NQ5	10.00 [254.00]	7.75 [196.85]	17.25 [438.15]	115 [52]	W	SCD 1F
7.5	C1F007LES	NQ6A	12.25 [311.15]	9.25 [234.95]	17.63 [447.81]	148 [67]	W	SCD 2F
10	C1F010LES	NQ6	12.25 [311.15]	9.25 [234.95]	20.88 [530.36]	179 [81]	W	SCD 2F
15	C1F015LES	NQ7	14.50 [368.30]	10.75 [273.05]	21.38 [543.06]	265 [119]	W	SCD 2F
25	C1F025LES	NQ8	14.50 [368.30]	10.75 [273.05]	27.38 [695.46]	385 [173]	W	SCD 2F
37.5	C1F037LES	NQS10	21.88 [555.76]	18.50 [469.90]	31.00 [787.40]	598 [269]	F or W*	SCD 2F

** Copper wound unit*

277 PRIMARY VOLTAGE 120/240 SECONDARY VOLTAGE 50/60 HZ

kVA	Catalog Number	Case Style	Overall Dimensions* - Inches [mm]			Approx. Weight Lbs [kg]	Mtg Type W -Wall F -Floor	Wiring Diagram
			A	B	C			
0.05	C1FC05CE*	NQ0	3.69 [93.73]	5.06 [128.53]	7.19 [182.63]	7.0 [3.2]	W	SCD 4F
0.10	C1FC10CE*	NQ0	3.69 [93.73]	5.06 [128.53]	7.19 [182.63]	7.0 [3.2]	W	SCD 4F
0.15	C1FC15CE*	NQ0	3.69 [93.73]	5.06 [128.53]	7.19 [182.63]	8.0 [3.6]	W	SCD 4F
0.25	C1FC25CE*	NQ0	3.69 [93.73]	5.06 [128.53]	7.19 [182.63]	9.0 [4.1]	W	SCD 4F
0.35	C1FC35CE*	NQ2	5.06 [128.53]	4.56 [115.83]	9.30 [236.22]	15.0 [6.8]	W	SCD 4F
0.50	C1FC50CE*	NQ2	5.06 [128.53]	4.56 [115.83]	9.30 [236.22]	15.0 [6.8]	W	SCD 4F
0.75	C1FC75CES*	NQ2	5.06 [128.53]	4.56 [115.83]	9.30 [236.22]	23.0 [10.4]	W	SCD 4F
1	C1F1C0CES*	NQ3	5.88 [149.36]	5.19 [131.83]	10.56 [268.23]	24.0 [10.8]	W	SCD 4F
1.5	C1F1C5CES*	NQ3	5.88 [149.36]	5.19 [131.83]	10.56 [268.23]	33.0 [14.9]	W	SCD 4F
2	C1F002CES*	NQ4	7.06 [179.33]	6.25 [158.75]	11.75 [298.45]	42.0 [18.9]	W	SCD 4F
3	C1F003CES*	NQ4	7.06 [179.33]	6.25 [158.75]	11.75 [298.45]	55.0 [24.8]	W	SCD 4F
5	C1F005CES	NQ5	10.00 [254.00]	7.75 [196.85]	17.25 [438.15]	115 [52]	W	SCD 4F
7.5	C1F007CES	NQ6A	12.25 [311.15]	9.25 [234.95]	17.63 [447.81]	148 [67]	W	SCD 2F
10	C1F010CES	NQ6	12.25 [311.15]	9.25 [234.95]	20.88 [530.36]	178 [80]	W	SCD 2F

** Copper wound unit*

277/480 PRIMARY VOLTAGE 208/277 SECONDARY VOLTAGE 50/60 HZ

kVA	Catalog Number	Case Style	Overall Dimensions* - Inches [mm]			Approx. Weight Lbs [kg]	Mtg Type W -Wall F -Floor	Wiring Diagram
			A	B	C			
0.05	C1FC05HR*	NQ0	3.69 [93.73]	5.06 [128.53]	7.19 [182.63]	7.0 [3.2]	W	SCD 42F
0.10	C1FC10HR*	NQ0	3.69 [93.73]	5.06 [128.53]	7.19 [182.63]	8.0 [3.6]	W	SCD 42F
0.15	C1FC15HR*	NQ0	3.69 [93.73]	5.06 [128.53]	7.19 [182.63]	11.0 [5.0]	W	SCD 42F
0.25	C1FC25HR*	NQ1	4.31 [109.48]	5.56 [141.23]	7.19 [182.63]	12.0 [5.4]	W	SCD 42F
0.35	C1FC35HR*	NQ2	5.06 [128.53]	4.56 [115.83]	9.30 [236.22]	15.0 [6.8]	W	SCD 42F
0.50	C1FC50HR*	NQ2	5.06 [128.53]	4.56 [115.83]	9.30 [236.22]	18.0 [8.1]	W	SCD 42F
0.75	C1FC75HRS*	NQ3	5.88 [149.36]	5.19 [131.83]	10.56 [268.23]	25.0 [11.3]	W	SCD 42F
1	C1F1C0HRS*	NQ3	5.88 [149.36]	5.19 [131.83]	10.56 [268.23]	31.0 [14.0]	W	SCD42F
1.5	C1F1C5HRS*	NQ4	7.06 [179.33]	6.25 [158.75]	11.75 [298.45]	39.0 [17.6]	W	SCD 42F
2	C1F002HRS*	NQ4	7.06 [179.33]	6.25 [158.75]	11.75 [298.45]	54.0 [24.3]	W	SCD 42F
3	C1F003HRS*	NQ5	10.00 [254.00]	7.75 [196.85]	17.25 [438.15]	80.0 [36.0]	W	SCD 43F
5	C1F005HRS	NQ5	10.00 [254.00	7.75 [196.85]	17.25 [438.15]	156 [70]	W	SCD 43F
7.5	C1F007HRS	NQ6	12.25 [311.15]	9.25 [234.95]	20.88 [530.36]	188 [85]	W	SCD 43F
10	C1F010HRS	NQ6	12.25 [311.15]	9.25 [234.95]	20.88 [530.36]	179 [81]	W	SCD 43F

** Copper wound unit*

SELECTION TABLES

Aluminum Wound Single Phase, Type 3R Enclosure

347/380 PRIMARY VOLTAGE CE 120/240 SECONDARY VOLTAGE 50/60 HZ

kVA	Catalog Number	Case Style	Overall Dimensions* - Inches [mm]			Approx. Weight Lbs [kg]	Mtg Type W -Wall F -Floor	Wiring Diagram
			A	B	C			
0.05	C1FC05JE*	NQ0	3.69 [93.73]	5.06 [128.53]	7.19 [182.63]	7.0 [3.2]	W	SCD 33F
0.10	C1FC10JE*	NQ0	3.69 [93.73]	5.06 [128.53]	7.19 [182.63]	7.0 [3.2]	W	SCD 33F
0.15	C1FC15JE*	NQ0	3.69 [93.73]	5.06 [128.53]	7.19 [182.63]	8.0 [3.6]	W	SCD 33F
0.25	C1FC25JE*	NQ0	3.69 [93.73]	5.06 [128.53]	7.19 [182.63]	9.0 [4.1]	W	SCD 33F
0.35	C1FC35JE*	NQ1	4.31 [109.48]	5.56 [141.23]	7.19 [182.63]	14.0 [6.3]	W	SCD 33F
0.50	C1FC50JE*	NQ1	4.31 [109.48]	5.56 [141.23]	7.19 [182.63]	14.0 [6.3]	W	SCD 33F
0.75	C1FC75JES*	NQ2	5.06 [128.53]	4.56 [115.83]	9.30 [236.22]	23.0 [10.4]	W	SCD 33F
1	C1F1C0JES*	NQ3	5.88 [149.36]	5.19 [131.83]	10.56 [268.23]	32.0 [14.4]	W	SCD 33F
1.5	C1F1C5JES*	NQ3	5.88 [149.36]	5.19 [131.83]	10.56 [268.23]	35.0 [15.8]	W	SCD 33F
2	C1F002JES*	NQ4	7.06 [179.33]	6.25 [158.75]	11.75 [298.45]	51.0 [23.0]	W	SCD 33F
3	C1F003JES*	NQ5	10.00 [254.00]	7.75 [196.85]	17.25 [438.15]	98.0 [44.1]	W	SCD 44F
5	C1F005JES	NQ5	10.00 [254.00]	7.75 [196.85]	17.25 [438.15]	120 [54]	W	SCD 44F
7.5	C1F007JES	NQ6A	12.25 [311.15]	9.25 [234.95]	17.63 [447.81]	162 [73]	W	SCD 44F
10	C1F010JES	NQ6	12.25 [311.15]	9.25 [234.95]	20.88 [530.36]	194 [87]	W	SCD 44F

** Copper wound unit*

600 PRIMARY VOLTAGE 120/240 SECONDARY VOLTAGE 60 HZ

kVA	Catalog Number	Case Style	Overall Dimensions* - Inches [mm]			Approx. Weight Lbs [kg]	Mtg Type W -Wall F -Floor	Wiring Diagram
			A	B	C			
0.05	C1FC05PE*	NQ0	3.69 [93.73]	5.06 [128.53]	7.19 [182.63]	7.0 [3.2]	W	SCD 4F
0.10	C1FC10PE*	NQ0	3.69 [93.73]	5.06 [128.53]	7.19 [182.63]	7.0 [3.2]	W	SCD 4F
0.15	C1FC15PE*	NQ0	3.69 [93.73]	5.06 [128.53]	7.19 [182.63]	8.0 [3.6]	W	SCD 4F
0.25	C1FC25PE*	NQ0	3.69 [93.73]	5.06 [128.53]	7.19 [182.63]	9.0 [4.1]	W	SCD 4F
0.35	C1FC35PE*	NQ1	4.31 [109.48]	5.56 [141.23]	7.19 [182.63]	15.0 [6.8]	W	SCD 4F
0.50	C1FC50PE*	NQ1	4.31 [109.48]	5.56 [141.23]	7.19 [182.63]	16.0 [7.2]	W	SCD 4F
0.75	C1FC75PES*	NQ2	5.06 [128.53]	4.56 [115.83]	9.30 [236.22]	23.0 [10.4]	W	SCD 4F
1	C1F1C0PES*	NQ3	5.88 [149.36]	5.19 [131.83]	10.56 [268.23]	24.0 [10.8]	W	SCD 4F
1.5	C1F1C5PES*	NQ3	5.88 [149.36]	5.19 [131.83]	10.56 [268.23]	33.0 [14.9]	W	SCD 4F
2	C1F002PES*	NQ4	7.06 [179.33]	6.25 [158.75]	11.75 [298.45]	42.0 [18.9]	W	SCD 4F
3	C1F003PES*	NQ4	7.06 [179.33]	6.25 [158.75]	11.75 [298.45]	55.0 [24.8]	W	SCD 4F
5	C1F005PES	NQ5	10.00 [254.00]	7.75 [196.85]	17.25 [438.15]	120 [54]	W	SCD 4F
7.5	C1F007PES	NQ6A	12.25 [311.15]	9.25 [234.95]	17.63 [447.81]	148 [67]	W	SCD 5F
10	C1F010PES	NQ6	12.25 [311.15]	9.25 [234.95]	20.88 [530.36]	179 [81]	W	SCD 5F
15	C1F015PES	NQ7	14.50 [368.30]	10.75 [273.05]	21.38 [543.06]	265 [119]	W	SCD 5F
25	C1F025PES	NQ8	14.50 [368.30]	10.75 [273.05]	27.38 [695.46]	385 [173]	W	SCD 5F
37.5	C1F037PES	NQS10	21.88 [555.76]	18.50 [469.90]	31.00 [787.40]	598 [269]	F or W*	SCD 5F

** Copper wound unit*

Export Model CE

190/200/208/220/240[1] X 380/400/416/440/480[1] PRIMARY VOLTAGE 120/240 SECONDARY VOLTAGE 50/60 HZ

kVA	Catalog Number	Case Style	Overall Dimensions* - Inches [mm]			Approx. Weight Lbs [kg]	Mtg Type W -Wall F -Floor	Wiring Diagram
			A	B	C			
0.05	C1FC05XE*	NQ0	3.69 [93.73]	5.06 [128.53]	7.19 [182.63]	7.0 [3.2]	W	SCD 28F
0.10	C1FC10XE*	NQ0	3.69 [93.73]	5.06 [128.53]	7.19 [182.63]	7.0 [3.2]	W	SCD 28F
0.15	C1FC15XE*	NQ0	3.69 [93.73]	5.06 [128.53]	7.19 [182.63]	9.0 [4.1]	W	SCD 28F
0.25	C1FC25XE*	NQ0	3.69 [93.73]	5.06 [128.53]	7.19 [182.63]	10.0 [4.5]	W	SCD 28F
0.35	C1FC35XE*	NQ1	4.31 [109.48]	5.56 [141.23]	7.19 [182.63]	15.0 [6.8]	W	SCD 28F
0.50	C1FC50XE*	NQ1	4.31 [109.48]	5.56 [141.23]	7.19 [182.63]	16.0 [7.2]	W	SCD 28F
0.75	C1FC75XES*	NQ2	5.06 [128.53]	4.56 [115.83]	9.30 [236.22]	24.0 [10.8]	W	SCD 28F
1	C1F1C0XES*	NQ3	5.88 [149.36]	5.19 [131.83]	10.56 [268.23]	32.0 [14.4]	W	SCD 28F
1.5	C1F1C5XES*	NQ4	7.06 [179.33]	6.25 [158.75]	11.75 [298.45]	37.0 [16.7]	W	SCD 28F
2	C1F002XES*	NQ4	7.06 [179.33]	6.25 [158.75]	11.75 [298.45]	52.0 [23.4]	W	SCD 28F
3	C1F003XES*	NQ5	10.00 [254.00]	7.75 [196.85]	17.25 [438.15]	97.0 [43.7]	W	SCD 2F
5	C1F005XES	NQ5	10.00 [254.00]	7.75 [196.85]	17.25 [438.15]	120 [54]	W	SCD 2F
7.5	C1F007XES	NQ6A	12.25 [311.15]	9.25 [234.95]	17.63 [447.81]	148 [67]	W	SCD 2F
10	C1F010XES	NQ6	12.25 [311.15]	9.25 [234.95]	20.88 [530.36]	179 [81]	W	SCD 2F

** Copper wound unit*

Note [1] The primary voltage ratio of 240 or 480 is available at 60Hz only with a secondary voltage of approximately 130/262V

SELECTION TABLES

Aluminum Wound Three Phase, Type 4 Enclosure

208D PRIMARY VOLTAGE 208Y/120 SECONDARY VOLTAGE 60 HZ

kVA	Catalog Number	Case Style	Overall Dimensions* - Inches [mm] A	B	C	Full Capacity Taps	Approx. Weight Lbs [kg]	Mtg Type W -Wall F -Floor	Wiring Diagram
6	FC2A0006BB	DQT3	19.13 [485.90]	11.88 [301.75]	14.69 [373.13]	2 - 5% 1FCAN, 1FCBN	160 [72.57]	W/F	SCD 8F
9	FC2A0009BB	DQT3A	20.38 [517.65]	13.00 [330.20]	16.38 [416.05]	2 - 5% 1FCAN, 1FCBN	215 [97.52]	W/F	SCD 8F
15	FC2A0015BB	DQT5	25.88 [657.35]	16.50 [419.10]	21.88 [555.75]	6 - 2.5% 2FCAN, 4FCBN	375 [170.10]	F (Opt. W)	SCD 19F
30	FC2A0030BB	DQT6	26.13 [663.70]	19.75 [501.65]	21.88 [555.75]	6 - 2.5% 2FCAN, 4FCBN	510 [231.33]	F (Opt. W)	SCD 19F
45	FC2A0045BB	DQT7	32.38 [822.45]	22.00 [558.80]	25.63 [651.00]	6 - 2.5% 2FCAN, 4FCBN	690 [312.98]	F	SCD 19F
75	FC2A0075BB	DQT8	35.13 [892.30]	26.00 [660.40]	26.63 [676.40]	4 - 3.5% 2FCAN, 2FCBN	1350 [612.35]	F	SCD 3F

Refer to wiring diagrams for tap details *Opt. W: Wall Mounting Kit DQTW1 Available*

208D PRIMARY VOLTAGE 480Y/277 SECONDARY VOLTAGE 60 HZ

kVA	Catalog Number	Case Style	Overall Dimensions* - Inches [mm] A	B	C	Full Capacity Taps	Approx. Weight Lbs [kg]	Mtg Type W -Wall F -Floor	Wiring Diagram
6	FC2A0006BK	DQT3	19.13 [485.90]	11.88 [301.75]	14.69 [373.13]	2 - 5% 1FCAN, 1FCBN	160 [72.57]	W/F	SCD 23F
9	FC2A0009BK	DQT3A	20.38 [517.65]	13.00 [330.20]	16.38 [416.05]	2 - 5% 1FCAN, 1FCBN	215 [97.52]	W/F	SCD 23F
15	FC2A0015BK	DQT5	25.88 [657.35]	16.50 [419.10]	21.88 [555.75]	6 - 2.5% 2FCAN, 4FCBN	375 [170.10]	F (Opt. W)	SCD 53F
30	FC2A0030BK	DQT6	26.13 [663.70]	19.75 [501.65]	21.88 [555.75]	6 - 2.5% 2FCAN, 4FCBN	510 [231.33]	F (Opt. W)	SCD 53F
45	FC2A0045BK	DQT7	32.38 [822.45]	22.00 [558.80]	25.63 [651.00]	6 - 2.5% 2FCAN, 4FCBN	690 [312.98]	F	SCD 53F
75	FC2A0075BK	DQT8	35.13 [892.30]	26.00 [660.40]	26.63 [676.40]	4 - 3.5% 2FCAN, 2FCBN	1350 [612.35]	F	SCD 26F

Refer to wiring diagrams for tap details *Opt. W: Wall Mounting Kit DQTW1 Available*

240D PRIMARY VOLTAGE 208Y/120 SECONDARY VOLTAGE 60 HZ

kVA	Catalog Number	Case Style	Overall Dimensions* - Inches [mm] A	B	C	Full Capacity Taps	Approx. Weight Lbs [kg]	Mtg Type W -Wall F -Floor	Wiring Diagram
6	FC2A0006DB	DQT3	19.13 [485.90]	11.88 [301.75]	14.69 [373.13]	2 - 5% 1FCAN, 1FCBN	160 [72.57]	W/F	SCD 8F
9	FC2A0009DB	DQT3A	20.38 [517.65]	13.00 [330.20]	16.38 [416.05]	2 - 5% 1FCAN, 1FCBN	215 [97.52]	W/F	SCD 8F
15	FC2A0015DB	DQT5	25.88 [657.35]	16.50 [419.10]	21.88 [555.75]	6 - 2.5% 2FCAN, 4FCBN	375 [170.10]	F (Opt. W)	SCD 19F
30	FC2A0030DB	DQT6	26.13 [663.70]	19.75 [501.65]	21.88 [555.75]	6 - 2.5% 2FCAN, 4FCBN	510 [231.33]	F (Opt. W)	SCD 19F
45	FC2A0045DB	DQT7	32.38 [822.45]	22.00 [558.80]	25.63 [651.00]	6 - 2.5% 2FCAN, 4FCBN	690 [312.98]	F	SCD 19F
75	FC2A0075DB	DQT8	35.13 [892.30]	26.00 [660.40]	26.63 [676.40]	6 - 2.5% 2FCAN, 4FCBN	1350 [612.35]	F	SCD 19F

Refer to wiring diagrams for tap details *Opt. W: Wall Mounting Kit DQTW1 Available*

240D PRIMARY VOLTAGE 480Y/277Y SECONDARY VOLTAGE 60 HZ

kVA	Catalog Number	Case Style	Overall Dimensions* - Inches [mm] A	B	C	Full Capacity Taps	Approx. Weight Lbs [kg]	Mtg Type W -Wall F -Floor	Wiring Diagram
6	FC2A0006DK	DQT3	19.13 [485.90]	11.88 [301.75]	14.69 [373.13]	2 - 5% 1FCAN, 1FCBN	160 [72.57]	W/F	SCD 23F
9	FC2A0009DK	DQT3A	20.38 [517.65]	13.00 [330.20]	16.38 [416.05]	2 - 5% 1FCAN, 1FCBN	215 [97.52]	W/F	SCD 23F
15	FC2A0015DK	DQT5	25.88 [657.35]	16.50 [419.10]	21.88 [555.75]	6 - 2.5% 2FCAN, 4FCBN	375 [170.10]	F (Opt. W)	SCD 53F
30	FC2A0030DK	DQT6	26.13 [663.70]	19.75 [501.65]	21.88 [555.75]	6 - 2.5% 2FCAN, 4FCBN	510 [231.33]	F (Opt. W)	SCD 53F
45	FC2A0045DK	DQT7	32.38 [822.45]	22.00 [558.80]	25.63 [651.00]	6 - 2.5% 2FCAN, 4FCBN	690 [312.98]	F	SCD 53F
75	FC2A0075DK	DQT8	35.13 [892.30]	26.00 [660.40]	26.63 [676.40]	6 - 2.5% 2FCAN, 4FCBN	1350 [612.35]	F	SCD 53F

Refer to wiring diagrams for tap details *Opt. W: Wall Mounting Kit DQTW1 Available*

480D PRIMARY VOLTAGE 208Y/120 SECONDARY VOLTAGE 60 HZ

kVA	Catalog Number	Case Style	Overall Dimensions* - Inches [mm] A	B	C	Full Capacity Taps	Approx. Weight Lbs [kg]	Mtg Type W -Wall F -Floor	Wiring Diagram
6	FC2A0006KB	DQT3	19.13 [485.90]	11.88 [301.75]	14.69 [373.13]	2 - 5% 1FCAN, 1FCBN	160 [72.57]	W/F	SCD 8F
9	FC2A0009KB	DQT3A	20.38 [517.65]	13.00 [330.20]	16.38 [416.05]	2 - 5% 1FCAN, 1FCBN	215 [97.52]	W/F	SCD 8F
15	FC2A0015KB	DQT5	25.88 [657.35]	16.50 [419.10]	21.88 [555.75]	6 - 2.5% 2FCAN, 4FCBN	375 [170.10]	F (Opt. W)	SCD 19F
30	FC2A0030KB	DQT6	26.13 [663.70]	19.75 [501.65]	21.88 [555.75]	6 - 2.5% 2FCAN, 4FCBN	510 [231.33]	F (Opt. W)	SCD 19F
45	FC2A0045KB	DQT7	32.38 [822.45]	22.00 [558.80]	25.63 [651.00]	6 - 2.5% 2FCAN, 4FCBN	690 [312.98]	F	SCD 19F
75	FC2A0075KB	DQT8	35.13 [892.30]	26.00 [660.40]	26.63 [676.40]	6 - 2.5% 2FCAN, 4FCBN	1350 [612.35]	F	SCD 19F

Refer to wiring diagrams for tap details *Opt. W: Wall Mounting Kit DQTW1 Available*

SELECTION TABLES

Aluminum Wound Three Phase, Type 4 Enclosure

480D PRIMARY VOLTAGE 240/120D SECONDARY VOLTAGE 60 HZ

kVA	Catalog Number	Case Style	Overall Dimensions* - Inches [mm]			Full Capacity Taps	Approx. Weight Lbs [kg]	Mtg Type W -Wall F -Floor	Wiring Diagram
			A	B	C				
6	FC2A0006KD	DQT3	19.13 [485.90]	11.88 [301.75]	14.69 [373.13]	2 - 5% 1FCAN, 1FCBN	160 [72.57]	W/F	SCD 8F
9	FC2A0009KD	DQT3A	20.38 [517.65]	13.00 [330.20]	16.38 [416.05]	2 - 5% 1FCAN, 1FCBN	215 [97.52]	W/F	SCD 8F
15	FC2A0015KD	DQT5	25.88 [657.35]	16.50 [419.10]	21.88 [555.75]	6 - 2.5% 2FCAN, 4FCBN	375 [170.10]	F (Opt. W)	SCD 19F
30	FC2A0030KD	DQT6	26.13 [663.70]	19.75 [501.65]	21.88 [555.75]	6 - 2.5% 2FCAN, 4FCBN	510 [231.33]	F (Opt. W)	SCD 19F
45	FC2A0045KD	DQT7	32.38 [822.45]	22.00 [558.80]	25.63 [651.00]	6 - 2.5% 2FCAN, 4FCBN	690 [312.98]	F	SCD 19F
75	FC2A0075KD	DQT8	35.13 [892.30]	26.00 [660.40]	26.63 [676.40]	6 - 2.5% 2FCAN, 4FCBN	1350 [612.35]	F	SCD 19F

Refer to wiring diagrams for tap details *Opt. W: Wall Mounting Kit DQTW1 Available*

600D PRIMARY VOLTAGE 208Y/120 SECONDARY VOLTAGE 60 HZ

kVA	Catalog Number	Case Style	Overall Dimensions* - Inches [mm]			Full Capacity Taps	Approx. Weight Lbs [kg]	Mtg Type W -Wall F -Floor	Wiring Diagram
			A	B	C				
6	FC2A0006PB	DQT3	19.13 [485.90]	11.88 [301.75]	14.69 [373.13]	2 - 5% 1FCAN, 1FCBN	160 [72.57]	W/F	SCD 8F
9	FC2A0009PB	DQT3A	20.38 [517.65]	13.00 [330.20]	16.38 [416.05]	2 - 5% 1FCAN, 1FCBN	215 [97.52]	W/F	SCD 8F
15	FC2A0015PB	DQT5	25.88 [657.35]	16.50 [419.10]	21.88 [555.75]	6 - 2.5% 2FCAN, 4FCBN	375 [170.10]	F (Opt. W)	SCD 19F
30	FC2A0030PB	DQT6	26.13 [663.70]	19.75 [501.65]	21.88 [555.75]	6 - 2.5% 2FCAN, 4FCBN	510 [231.33]	F (Opt. W)	SCD 19F
45	FC2A0045PB	DQT7	32.38 [822.45]	22.00 [558.80]	25.63 [651.00]	6 - 2.5% 2FCAN, 4FCBN	690 [312.98]	F	SCD 19F
75	FC2A0075PB	DQT8	35.13 [892.30]	26.00 [660.40]	26.63 [676.40]	6 - 2.5% 2FCAN, 4FCBN	1350 [612.35]	F	SCD 19F

Refer to wiring diagrams for tap details *Opt. W: Wall Mounting Kit DQTW1 Available*

600D PRIMARY VOLTAGE 240Y/120D SECONDARY VOLTAGE 60 HZ

kVA	Catalog Number	Case Style	Overall Dimensions* - Inches [mm]			Full Capacity Taps	Approx. Weight Lbs [kg]	Mtg Type W -Wall F -Floor	Wiring Diagram
			A	B	C				
6	FC2A0006PD	DQT3	19.13 [485.90]	11.88 [301.75]	14.69 [373.13]	2 - 5% 1FCAN, 1FCBN	160 [72.57]	W/F	SCD 8F
9	FC2A0009PD	DQT3A	20.38 [517.65]	13.00 [330.20]	16.38 [416.05]	2 - 5% 1FCAN, 1FCBN	215 [97.52]	W/F	SCD 8F
15	FC2A0015PD	DQT5	25.88 [657.35]	16.50 [419.10]	21.88 [555.75]	6 - 2.5% 2FCAN, 4FCBN	375 [170.10]	F (Opt. W)	SCD 19F
30	FC2A0030PD	DQT6	26.13 [663.70]	19.75 [501.65]	21.88 [555.75]	6 - 2.5% 2FCAN, 4FCBN	510 [231.33]	F (Opt. W)	SCD 19F
45	FC2A0045PD	DQT7	32.38 [822.45]	22.00 [558.80]	25.63 [651.00]	6 - 2.5% 2FCAN, 4FCBN	690 [312.98]	F	SCD 19F
75	FC2A0075PD	DQT8	35.13 [892.30]	26.00 [660.40]	26.63 [676.40]	6 - 2.5% 2FCAN, 4FCBN	1350 [612.35]	F	SCD 19F

Refer to wiring diagrams for tap details *Opt. W: Wall Mounting Kit DQTW1 Available*

600D PRIMARY VOLTAGE 480Y/277 SECONDARY VOLTAGE 60 HZ

kVA	Catalog Number	Case Style	Overall Dimensions* - Inches [mm]			Full Capacity Taps	Approx. Weight Lbs [kg]	Mtg Type W -Wall F -Floor	Wiring Diagram
			A	B	C				
6	FC2A0006PK	DQT3	19.13 [485.90]	11.88 [301.75]	14.69 [373.13]	2 - 5% 1FCAN, 1FCBN	160 [72.57]	W/F	SCD 8F
9	FC2A0009PK	DQT3A	20.38 [517.65]	13.00 [330.20]	16.38 [416.05]	2 - 5% 1FCAN, 1FCBN	215 [97.52]	W/F	SCD 8F
15	FC2A0015PK	DQT5	25.88 [657.35]	16.50 [419.10]	21.88 [555.75]	6 - 2.5% 2FCAN, 4FCBN	375 [170.10]	F (Opt. W)	SCD 19F
30	FC2A0030PK	DQT6	26.13 [663.70]	19.75 [501.65]	21.88 [555.75]	6 - 2.5% 2FCAN, 4FCBN	510 [231.33]	F (Opt. W)	SCD 19F
45	FC2A0045PK	DQT7	32.38 [822.45]	22.00 [558.80]	25.63 [651.00]	6 - 2.5% 2FCAN, 4FCBN	690 [312.98]	F	SCD 19F
75	FC2A0075PK	DQT8	35.13 [892.30]	26.00 [660.40]	26.63 [676.40]	6 - 2.5% 2FCAN, 4FCBN	1350 [612.35]	F	SCD 19F

Refer to wiring diagrams for tap details *Opt. W: Wall Mounting Kit DQTW1 Available*

ACCESSORIES

Wall Mounting Kit

Single Phase

The following wall mounting kits are available:

Enclosure Case Style*	Mounting Type	Wall Mounting Kit Part Number
NQ0-NQ8	Wall	Included
NQS10	Wall or Floor	NQTW2

Features Included

- Manufactured from heavy-duty angle steel for maximum support.
- Wall mounting brackets are finished in matching ANSI 61 UL 50 Grey.
- All hardware required to attach to the transformer is supplied.
- Mounting brackets come with three wall mounting holes for maximum holding strength.

Three Phase

The following wall mounting kit is specifically designed for the three phase HPS Fortress encapsulated distribution transformers:

Enclosure Case Style*	Mounting Type	Wall Mounting Kit Part Number
DQT5-DQT6	Wall	DQTW1

The DQTW1 kit can only be used on any unit, up to a maximum of 800 pounds (363 kg) and utilizes an HPS DQT5 or DQT6 enclosure. Generally, this would be a 15kVA or 30kVA HPS Fortress encapsulated units.

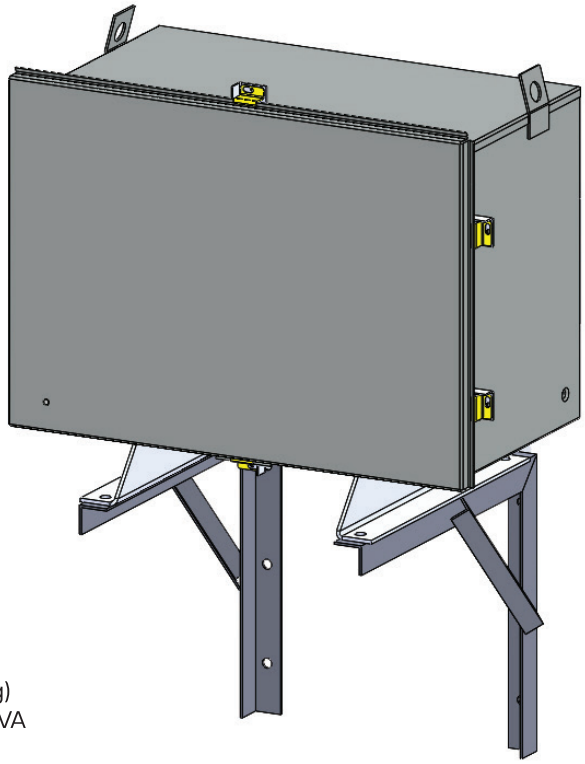

Note: The above image is showing a three phase unit.

IMPORTANT
Please ensure your wall mounting location and position meets all local building and fire codes and regulations.

TYPICAL PERFORMANCE DATA

GENERAL PURPOSE

Three Phase

VOLTAGE RANGE 120V TO 600V
135°C TEMP. RISE

kVA	Impedance	Peak Inrush Current Multiple of RMS Current
6	2-5%	20 to 30
9		
15		
30	1.8-2.5%	10 to 20
45		
75		

kVA	Efficiency (% rated load)		
	100%	50%	35%
6	92.91%	94.22%	93.96%
9	93.29%	94.72%	95.25%
15	94.50%	95.64%	95.97%
30	95.28%	96.35%	96.97%
45	98.28%	98.49%	98.05%
75	98.39%	98.67%	98.53%

- Efficiencies are approximate, and not guaranteed.
- All efficiencies are based on 75°C reference temperature.

TERMINATION DETAILS

TERMINATION, LEADS OR PADS

Single Phase Voltage (Primary or Secondary)

kVA	Voltage										
	120x240	120/240	208x416	120/208/240/277	240x480	277	277/480	208/277	347/380	600	
0.05											
0.1											
0.15											
0.25											
0.35											
0.5											
0.75											
1											
1.5											
2											
3											
5											
7.5	LUG1	1A	LUG1	LUG1	LUG1	LUG1	LUG1	1A	LUG1	LUG1	LUG1
10	LUG1	1A	LUG1	LUG1	LUG2	LUG1	LUG1	1B	LUG1	LUG1	LUG1
15	N/A	1A	N/A	N/A	LUG2	N/A	N/A	N/A	N/A	1A	LUG1
25	N/A	1B	N/A	N/A	LUG3	N/A	N/A	N/A	N/A	1A	N/A
37.5	N/A	1C	N/A	N/A	LUG3	N/A	N/A	N/A	N/A	1C	N/A

Lead Wire

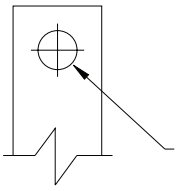

1A = 0.22" Dia.
1B = 0.28" Dia.
1C = 0.34" Dia.
1D = 0.44" Dia.

Diagram 1 - Single Phase

Three Phase Voltage (Primary or Secondary)

kVA	Voltage							
	208	230	240	277	380	400	480	600
6								
9								
15	1A	1A	1A	1A	1A	1A	1A	1A
30	1A	1A	1A	1A	1A	1A	1A	1A
45	1B	1A	1A	1A	1A	1A	1A	1A
75	1B	1B	1B	1B	1A	1A	1A	1A

Lead Wire

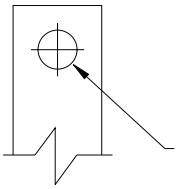

1A = 0.28" Dia.
1B = 0.44" Dia.

Diagram 1 - Three Phase

ENCLOSURE DRAWINGS & DIMENSIONS

NQ SERIES - SINGLE PHASE

Figure 1

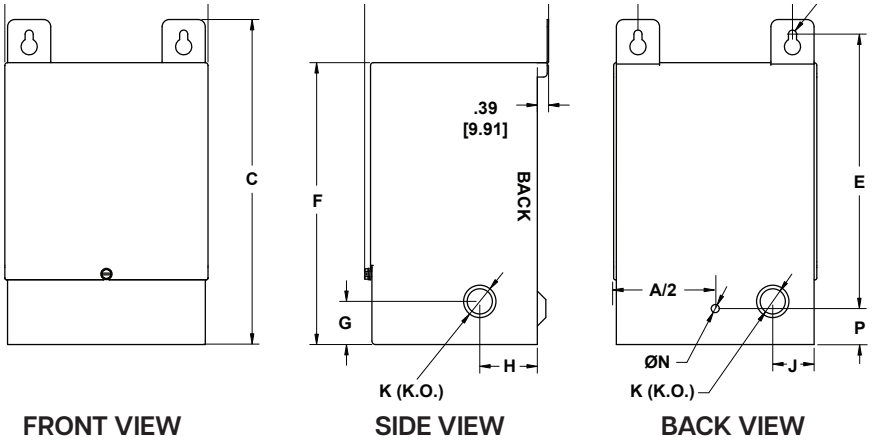

FRONT VIEW SIDE VIEW BACK VIEW

Figure 2

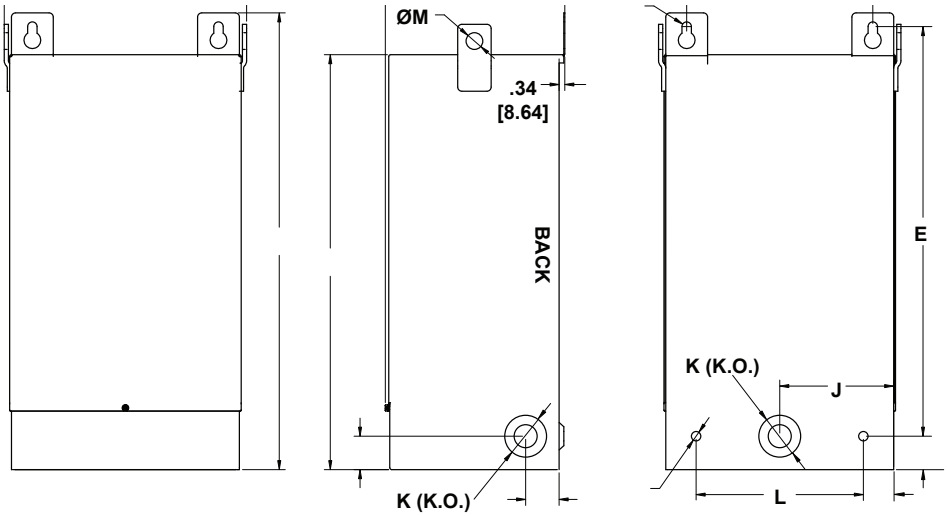

FRONT VIEW SIDE VIEW BACK VIEW

Case Style	Fig #	A	B	C	D	E	F	G	H	J	K[1]	L	M	N	P	R
NQ0	1	3.69 [93.73]	5.06 [128.53]	7.19 [182.63]	2.50 [63.50]	5.63 [143.01]	6.19 [157.23]	1.50 [38.10]	2.00 [50.80]	--	0.88 [22.36]	--	--	0.22 [5.59]	1.25 [31.75]	--
NQ1	1	4.31 [109.48]	5.56 [141.23]	7.19 [182.63]	3.13 [79.51]	5.63 [143.01]	6.13 [155.71]	1.50 [38.10]	2.00 [50.80]	0.81 [20.58]	0.88 [22.36]	--	--	0.22 [5.59]	1.25 [31.75]	--
NQ2	1	5.06 [128.53]	4.56 [115.83]	9.30 [236.22]	3.88 [98.56]	7.75 [196.85]	8.30 [210.82]	1.50 [38.10]	2.00 [50.80]	1.00 [25.40]	0.88 x 1.13 x 1.38 [22.36 x 28.71 x 35.06]	--	--	0.22 [5.59]	1.25 [31.75]	--
NQ3	1	5.88 [149.36]	5.19 [131.83]	10.56 [268.23]	4.13 [104.91]	8.31 [211.08]	9.06 [230.13]	1.50 [38.10]	2.00 [50.80]	1.25 [31.75]	0.88 x 1.13 x 1.38 [22.36 x 28.71 x 35.06]	--	--	0.28 [7.12]	1.25 [31.75]	--
NQ4	1	7.06 [179.33]	6.25 [158.75]	11.75 [298.45]	5.38 [136.66]	10.00 [254.00]	10.30 [261.62]	1.25 [31.75]	2.00 [50.80]	1.50 [38.10]	0.88 x 1.13 x 1.38 [22.36 x 28.71 x 35.06]	--	--	0.28 [7.12]	1.25 [31.75]	--
NQ5	2	10.00 [254.00]	7.75 [196.85]	17.25 [438.15]	7.38 [187.46]	15.38 [390.66]	15.25 [387.35]	2.375 [60.33]	2.00 [50.80]	4.00 [101.60]	1.13 x 1.38 [28.71 x 35.06]	6.00 [152.40]	0.75 [19.05]	0.44 [11.18]	1.25 [31.75]	1.68 [42.68]
NQ6A	2	12.25 [311.15]	9.25 [234.95]	17.63 [447.81]	9.38 [238.26]	14.88 [377.96]	15.56 [395.23]	2.00 [50.80]	2.00 [50.80]	5.00 [127.00]	1.38 x 2.50 [35.06 x 63.50]	8.00 [203.20]	0.75 [19.05]	0.44 [11.18]	2.00 [50.80]	1.68 [42.68]
NQ6	2	12.25 [311.15]	9.25 [234.95]	20.88 [530.36]	9.38 [238.26]	18.13 [460.51]	18.88 [479.56]	2.00 [50.80]	2.00 [50.80]	5.00 [127.00]	1.38 x 2.50 [35.06 x 63.50]	8.00 [203.20]	0.75 [19.05]	0.44 [11.18]	2.00 [50.80]	1.68 [42.68]
NQ7	2	14.50 [368.30]	10.75 [273.05]	21.38 [543.06]	11.63 [295.41]	18.63 [473.21]	19.38 [492.26]	2.00 [50.80]	2.00 [50.80]	6.00 [152.40]	1.38 x 2.50 [35.06 x 63.50]	10.00 [254.00]	0.75 [19.05]	0.44 [11.18]	2.00 [50.80]	1.68 [42.68]
NQ8	2	14.50 [368.30]	10.75 [273.05]	27.38 [695.46]	11.13 [282.71]	24.50 [622.30]	24.88 [631.96]	2.00 [50.80]	2.00 [50.80]	6.00 [152.40]	1.38 x 2.50 [35.06 x 63.50]	10.00 [254.00]	0.75 [19.05]	0.56 [14.23]	2.00 [50.80]	1.68 [42.68]

[1] *Knockout (K) sizes are actual diameters of knockout, not conduit sizes*

ENCLOSURE DRAWINGS & DIMENSIONS

DQT SERIES - THREE PHASE

Figure 1

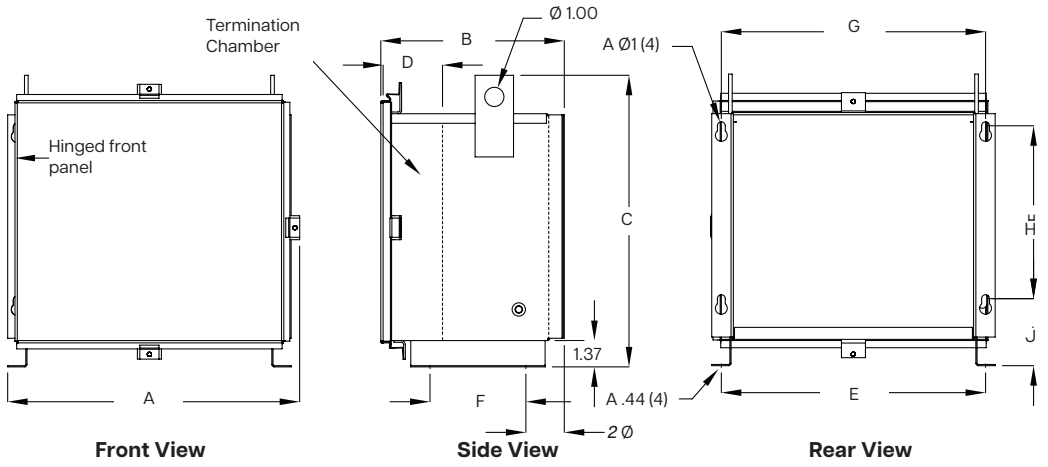

Figure 2

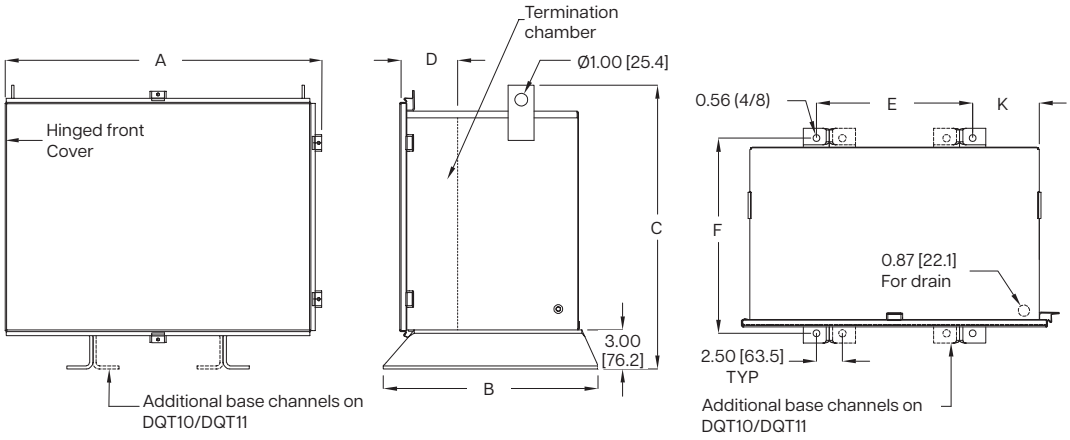

Case Style	Fig. #	Dimensions in Inches [Millimeter]									
		A	B	C	D*	E	F	G	H	J	K
DQT1	1	13.13 [333]	9.13 [232]	13.38 [340]	2.50 [63]	11.50 [292]	5.25 [133]	11.50 [292]	6.50 [165]	3.69 [94]	-
DQT2	1	15.88 [403]	9.88 [251]	15.38 [391]	2.50 [63]	14.25 [362]	6.00 [152]	14.25 [362]	8.00 [203]	3.69 [94]	-
DQT3	1	19.13 [485]	11.88 [302]	14.69 [373]	3.00 [76]	17.50 [444]	8.00 [203]	17.50 [444]	8.00 [203]	3.44 [87]	-
DQ3A	1	20.38 [518]	13.00 [330]	16.38 [416]	3.0 [76]	18.75 [476]	9.00 [229]	18.75 [476]	9.00 [229]	3.44 [87]	-
DQT4	1	22.38 [569]	13.88 352]	17.25 [438]	5.00 [127]	20.75 [527]	10.00 [254]	20.75 [527]	9.00 [229]	3.69 [94]	-
DQT5	2	25.88 [657]	16.50 [419]	21.88 [556]	4.50 [114]	14.00 [356]	15.00 [381]	-	-	-	4.62 [117]
DQT6	2	26.13 [664]	19.75 [501]	21.88 [556]	5.50 [140]	14.00 [356]	18.25 [463]	-	-	-	4.75 [121]
DQT7	2	32.38 [822]	22.00 [559]	25.63 [651]	6.00 [152]	20.00 [508]	20.50 [521]	-	-	-	4.88 [124]
DQT8	2	35.13 [892]	26.00 [660]	26.63 [676]	6.00 [152]	20.00 [508]	24.50 [622]	-	-	-	6.25 [159]

**D represents the typical minimum depth of the termination chamber (conduit fittings should be sized within these limits)*

ELECTRICAL SCHEMATICS & CONNECTION DRAWINGS

SCD 1F

Schematic

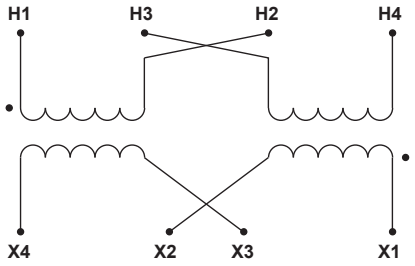

Connections

Primary Volts				Connect lines to	Inter-connect
240	480	416		H1, H4	H2-H3
120	240	208		H1, H4	H1-H3, H2-H4
Secondary Volts				**Connect lines to**	**Inter-connect**
24	32	48	240	X1, X4	X2-X3
12/24	16/63	24/48	120/240	X1, X2, X4	X2-X3
12	16	24	120	X1, X2	X2-X4, X1-X3

SCD 2F

Schematic

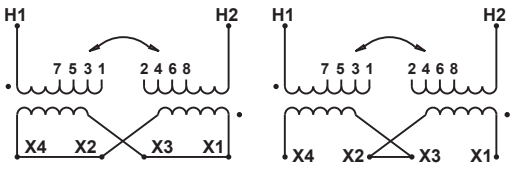

Connections

% Voltage	Primary Volts							Connect lines to	Inter-connect
105.0%	504	440	437	218	291	277	440	H1 H2	1-2
102.5%	492		426	213	284			H1, H2	2-3
100.0%	**480**	**416**	**416**	**208**	**277**	**240**	**416**	**H1 H2**	**3-4**
97.5%	468		406	203	270			H1, H2	4-5
95.0%	456	400	395	198	263	208	400	H1, H2	5-6
92.5%	444		385	192	256			H1, H2	6-7
90.0%	432	380	374	187	249	120	380	H1, H2	7-8
		220						H1, H2	H1-2, H2-1
	240	208	208					H1, H2	H1-4, H2-3
	228	200	198					H1, H2	H1-6, H2-5
	216	190	187					H1, H2	H1-8, H2-7
	Secondary Volts							**Connect lines to**	**Inter-connect**
	240							X1, X4	X2-X3
	120							X1, X2	X2-X4, X1-X3
	120/240							X1, X2, X4	X2-X3

SCD 3F

Schematic

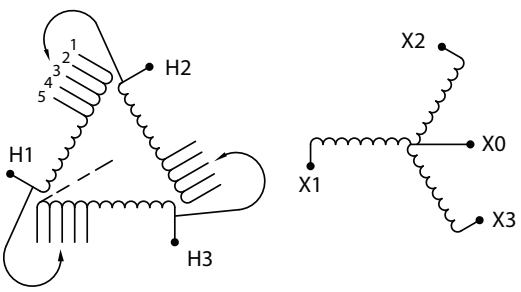

Connections

% Voltage	Primary Volts				Connect lines to	Inter-connect
105.0%	219	252	504	630	H1, H2, H3	1
102.5%	213	246	492	615	H1, H2, H3	2
100.0%	**208**	**240**	**480**	**600**	**H1, H2, H3**	**3**
97.5%	203	234	468	585	H1, H2, H3	4
95.0%	198	228	456	570	H1, H2, H3	5
	Secondary Volts				**Connect lines to**	**Inter-connect**
	208	240	400		X1, X2, X3	-
	120	139	231		X1, X0 | X2, X0 | X3, X0	-

ELECTRICAL SCHEMATICS & CONNECTION DRAWINGS

SCD 4F

Schematic

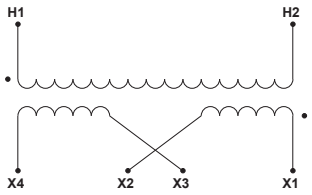

Connections

Primary Volts												Connect lines to	Inter-connect
208	277	347	380	416	600	2400	3300	4160	4800	6600	7200	H1, H2	-
Secondary Volts												**Connect lines to**	**Inter-connect**
					240		24					X1, X4	X2-X3
					120/240		12/24					X1, X2, X4	X2-X3
					120		12					X1, X2	X2-X4, X1-X3

SCD 5F

Schematic

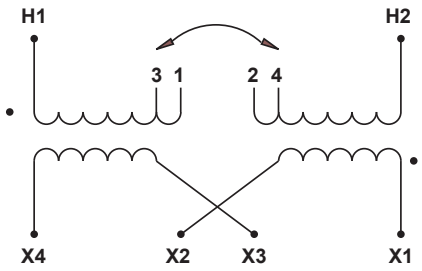

Connections

% Voltage	Primary Volts								Connect lines to	Inter-connect
100.0%	**120**	**208**	**240**	**277**	**380**	**416**	**480**	**600**	**H1, H2**	**1-2**
95.0%	114	198	228	263	361	395	156	570	H1, H2	2-3
90.0%	108	188	216	249	347	374	432	540	H1, H2	3-4
Secondary Volts									**Connect lines to**	**Inter-connect**
			240						X1, X4	X2-X3
			120/240						X1, X2, X4	X2-X3
			120						X1, X2	X2-X4, X1-X3

SCD 8F

Schematic

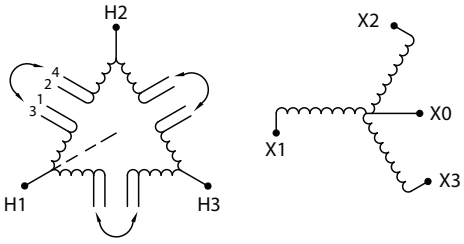

Connections

% Voltage	Primary Volts			Connect lines to	Inter-connect
105.0%	252	504	630	H1, H2, H3	1-2
100.0%	**240**	**480**	**600**	**H1, H2, H3**	**2-3**
95.0%	228	456	570	H1, H2, H3	3-4
Secondary Volts				**Connect lines to**	**Inter-connect**
	208	240	480	X1, X4	X2-X3
	120	139	277	X1, X2, X4	X2-X3
	120			X1, X2	X2-X4, X1-X3

SCD 19F

Schematic	Connections

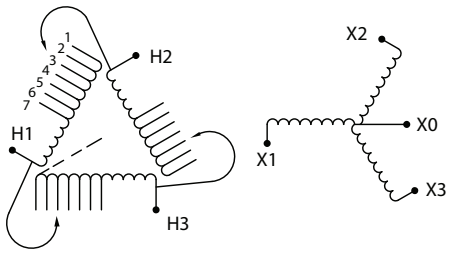

% Voltage	Primary Volts				Connect lines to	Inter-connect
105.0%	219	252	504	630	H1, H2, H3	1
102.5%	213	246	492	615	H1, H2, H3	2
100.0%	**208**	**240**	**480**	**600**	**H1, H2, H3**	**3**
97.5%	203	234	468	585	H1, H2, H3	4
95.0%	198	228	456	570	H1, H2, H3	5
92.5%	193	222	445	556	H1, H2, H3	6
90.0%	188	217	434	542	H1, H2, H3	7
	Secondary Volts				**Connect lines to**	**Inter-connect**
	208	240	400		X1, X4	X2-X3
	120	139	231		X1, X2	X2-X4, X1-X3

SCD 23F

Schematic	Connections

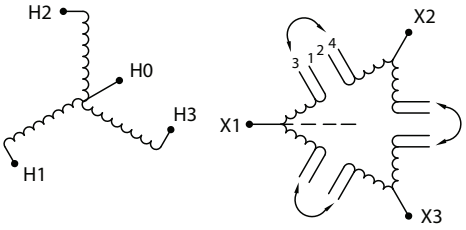

% Voltage	Primary Volts		Connect lines to	Inter-connect
105.0%	218	252	X1, X2, X3	1-2
100.0%	**208**	**240**	**X1, X2, X3**	**2-3**
95.0%	198	228	X1, X2, X3	3-4
	Secondary Volts		**Connect lines to**	**Inter-connect**
	240	480	H1, H2, H3	
	139	277	H1, H0 | H2, H0 | H3, H0	

SCD 26F

Schematic	Connections

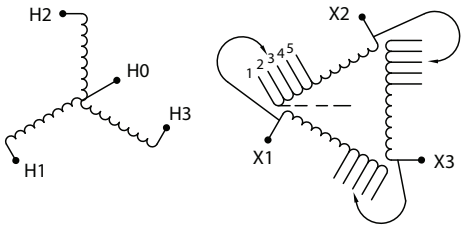

% Voltage	Primary Volts	Connect lines to	Inter-connect
107.0%	223	X1, X2, X3	1
103.5%	215	X1, X2, X3	2
100.0%	**208**	**X1, X2, X3**	**3**
96.5%	201	X1, X2, X3	4
93.0%	193	X1, X2, X3	5
	Secondary Volts	**Connect lines to**	**Inter-connect**
	240 480	H1, H2, H3	-
	139 277	H1, H0 | H2, H0 | H3, H0	-

ELECTRICAL SCHEMATICS & CONNECTION DRAWINGS

SCD 28F

Schematic

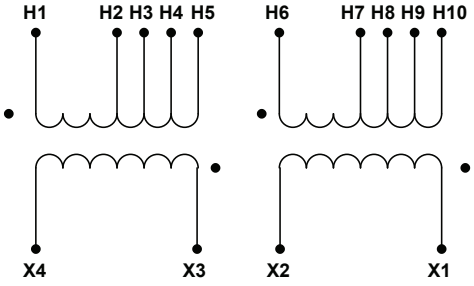

Connections

Primary Volts	Connect lines to	Inter-connect
480 (60Hz)	H1, H10	H5-H6
440	H1, H10	H5-H6
416	H1, H9	H4-H6
400	H1, H8	H3-H6
380	H1, H7	H2-H6
240 (60Hz)	H1, H10	H1-H6, H5-H10
220	H1, H10	H1-H6, H5-H10
208	H1, H9	H1-H6, H5-H10
200	H1, H8	H1-H6, H3-H8
190	H1, H7	H1-H6, H2-H7
Secondary Volts	**Connect lines to**	**Inter-connect**
240	X1, X4	X2-X3
120/240	X1, X2, X4	X2-X3
120	X1, X4	X2-X4, X1-X3

SCD 33F

Schematic

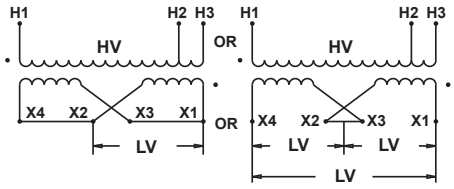

Connections

Primary Volts	Connect lines to	Inter-connect
380	H1, H3	-
347	H1, H2	-
Secondary Volts	**Connect lines to**	**Inter-connect**
240	X1, X4	X2-X3
120/240	X1, X2, X4	X2-X3
120	X1, X2	X2-X4, X1-X3

SCD 41F

Schematic

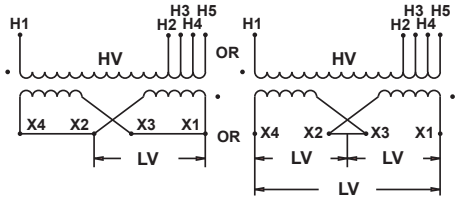

Connections

Primary Volts	Connect lines to	Inter-connect
277	H1, H5	-
240	H1, H4	-
208	H1, H3	-
120	H1, H2	-
Secondary Volts	**Connect lines to**	**Inter-connect**
240	X1, X4	X2-X3
120/240	X1, X2, X4	X2-X3
120	X1, X2	X2-X4, X1-X3

ELECTRICAL SCHEMATICS & CONNECTION DRAWINGS

SCD 42F

Schematic

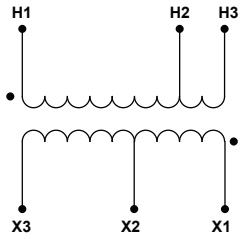

Connections

Primary Volts	Connect lines to	Inter-connect
480	H1, H3	-
277	H1, H2	-
Secondary Volts	**Connect lines to**	**Inter-connect**
277	X1, X3	-
208	X1, X2	-

SCD 43F

Schematic

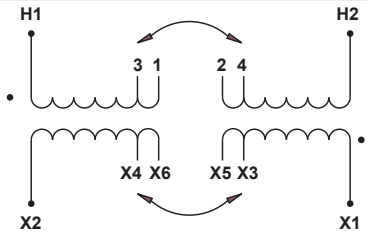

Connections

Primary Volts	Connect lines to	Inter-connect
480	H1, H2	1-2
277	H1, H2	2-3
Secondary Volts	**Connect lines to**	**Inter-connect**
277	X1, X2	X5-X6
208	X1, X2	X3-X4

SCD 44F

Schematic

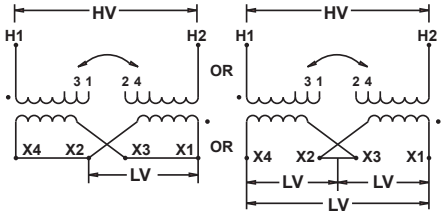

Connections

Primary Volts	Connect lines to	Inter-connect
380	H1, H2	1-2
347	H1, H2	3-4
Secondary Volts	**Connect lines to**	**Inter-connect**
240	X1, X4	X2-X3
120/240	X1, X2, X4	X2-X3
120	X1, X2	X2-X4, X1-X3

SCD 53F

Schematic

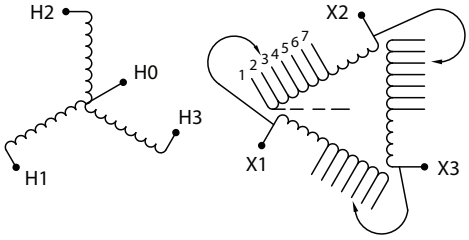

Connections

% Voltage	Primary Volts		Connect lines to	Inter-connect
105.0%	219	252	X1, X2, X3	1
102.5%	213	246	X1, X2, X3	2
100.0%	**208**	**240**	**X1, X2, X3**	**3**
97.5%	203	234	X1, X2, X3	4
95.0%	198	228	X1, X2, X3	5
92.5%	193	222	X1, X2, X3	6
90.0%	188	217	X1, X2, X3	7
	Secondary Volts		**Connect lines to**	**Inter-connect**
	240	480	H1, H2, H3	-
	139	277	H1, H0 | H2, H0 | H3, H0	-

CANADA

Hammond Power Solutions

595 Southgate Drive
Guelph, Ontario N1G 3W6
Tel: (519) 822-2441 | Fax: (519) 822-9701
Toll Free: 1-888-798-8882

sales@hammondpowersolutions.com

UNITED STATES

Hammond Power Solutions

1100 Lake Street
Baraboo, Wisconsin 53913-2866
Tel: (608) 356-3921 | Fax: (608) 355-7623
Toll Free: 1-866-705-4684

sales@hammondpowersolutions.com

MEXICO

Hammond Power Solutions Latin America S.

Av. No. 800,
Parque Industrial Guadalupe
Guadalupe, NL, Mexico, C.P. 67190.
Tel: (819) 690-8000

sales@hammondpowersolutions.com

ASIA

Hammond Power Solutions Pvt. Ltd.

Plot No 6A, Phase -1, IDA,
Pashamylaram, Patancheru (M)
Sangareddy, 502 307, India
Tel: +91-994-995-0009

marketing-india@hammondpowersolutions.com

EMEA (SALES OFFICE)

Hammond Power Solutions SpA

Tel: +49 (152) 08800468

sales-emea@hammondpowersolutions.com

hammondpowersolutions.com

hammond POWER SOLUTIONS

FORTSP-BBH2-EN
March 2024